BCAV-H-12-BK

Conduit, PA 6 V2, heavyweight, RAL 9005, NW12

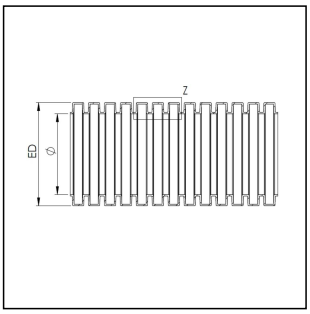

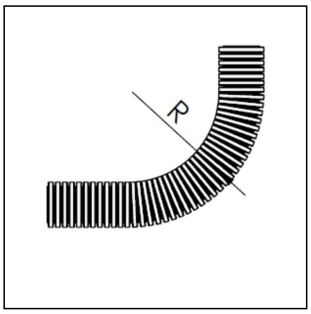

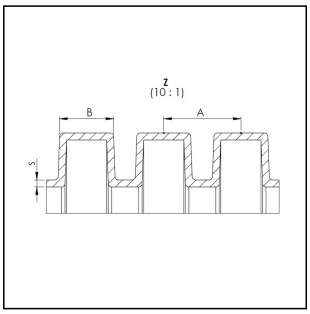

Products may differ in size, colour and appearance to those shown. If you require further information or customisation, please contact us directly.

BRACE RoHS

Material	PA6 UL94-V2
Temp. range min	-40 °C
Temp. range max	125 °C
Operational areas	Heavy mechanical engineering
Product Color	RAL 9005
NW	12
External diameter ED	15,8 mm
Ø inside	11 mm
Profile width A	3,1 mm
Width B	2,2 mm
Bending radius R	48 mm
Wall thickness S	0,4 mm
Model	heavy
Type	BCAV-H-12-BK
Order no. RAL 9005	10109201
Packing unit	50 m
EAN number	4007686083996
Tariff number	39173900
ETIM-Classification	EC001175

Recommended accessories

EBFS-12-16-BK	10106864
EBFS-12-20-BK	10106865

Your Contact:
WISKA Hoppmann GmbH
Kisdorfer Weg 28 · 24568 Kaltenkirchen · Germany
☎ +49-4191-508-0 · 🖷 +49-4191-508-209
contact@wiska.de · www.wiska.com

Other technical data on request / subject to change without notice

EMBFS-12-16-BK	10106896
EMBFS-12-20-BK	10106897
EMBFSI-12-16-BK	10106923
EMBFSI-12-20-BK	10106924
BCC-12-BK	10106941
EBF45-12-16-BK	10106958
EBF90-12-16-BK	10106976
EMBF90-12-16-BK	10107016
EMBF90-12-20-BK	10107017
EMBF45-12-16-BK	10107321
EMBF45-12-20-BK	10107322
EMBF45I-12-16-BK	10107340
EMBF45I-12-20-BK	10107341
EMBF90I-12-16-BK	10107364
EMBF90I-12-20-BK	10107365
EMBFSCG-12-16-BK	10107380
EMBFSCG-12-20-BK	10107381
EMBF45CG-12-16-BK	10107993
EMBF90CG-12-16-BK	10108007
EBF45-12-20-BK	10108877
EBF90-12-20-BK	10108892

23.05.2026

Your Contact:
WISKA Hoppmann GmbH
Kisdorfer Weg 28 · 24568 Kaltenkirchen · Germany
☎ +49-4191-508-0 · 🖷 +49-4191-508-209
contact@wiska.de · www.wiska.com

Other technical data on request / subject to change without notice

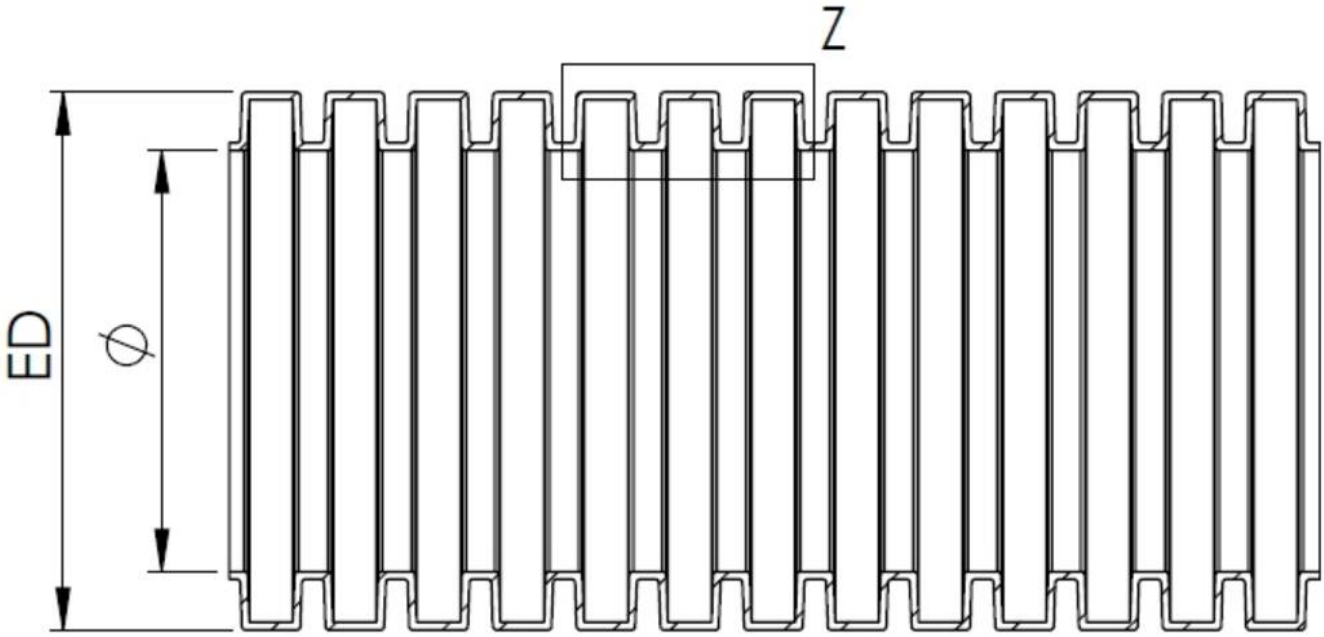

Your Contact:
WISKA Hoppmann GmbH
Kisdorfer Weg 28 · 24568 Kaltenkirchen · Germany
☎ +49-4191-508-0 · 🖷 +49-4191-508-209
contact@wiska.de · www.wiska.com

Other technical data on request / subject to change without notice

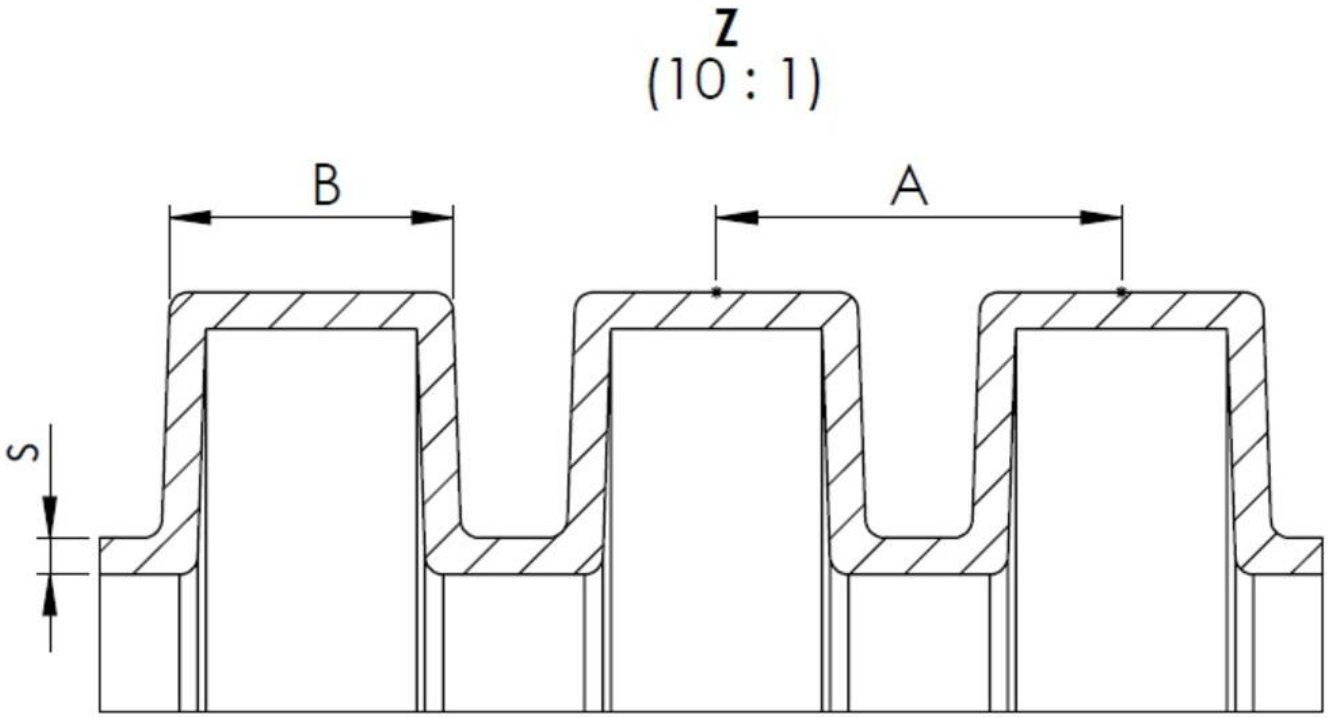

Your Contact:
WISKA Hoppmann GmbH
Kisdorfer Weg 28 · 24568 Kaltenkirchen · Germany
☎ +49-4191-508-0 · 🖷 +49-4191-508-209
contact@wiska.de · www.wiska.com

Other technical data on request / subject to change without notice