Rotary switch 7228496 - SE

Rotary switch, aluminium, RAL 7032, IP67

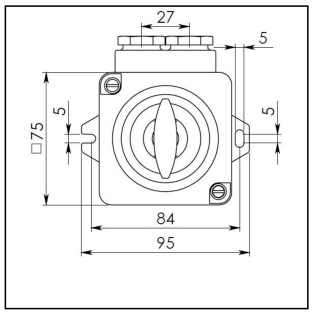

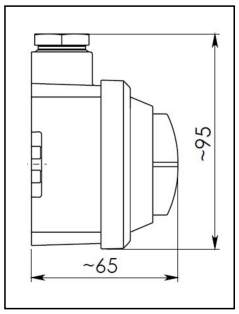

Products may differ in size, colour and appearance to those shown. If you require further information or customisation, please contact us directly.

SELCAST

WISKA-Order no.	50045006
Type	Rotary switch 7228496 - SE
Voltage	250 V
Current	10 A
Protection class	IP67
Material	Aluminium
Using for cable gland	
Mounting	Surface mounting
Temp. range min	-30 °C
Temp. range max	90 °C
Type of switch	Change-over, 2-pole
Colour	RAL 7032
Weight	0,3 kg
Equipment	Aluminium pressure screws PG16
Tariff number	85363010

23.05.2026

Your Contact:
WISKA Hoppmann GmbH
Kisdorfer Weg 28 · 24568 Kaltenkirchen · Germany
☎ +49-4191-508-0 · 🖷 +49-4191-508-209
contact@wiska.de · www.wiska.com

Other technical data on request / subject to change without notice

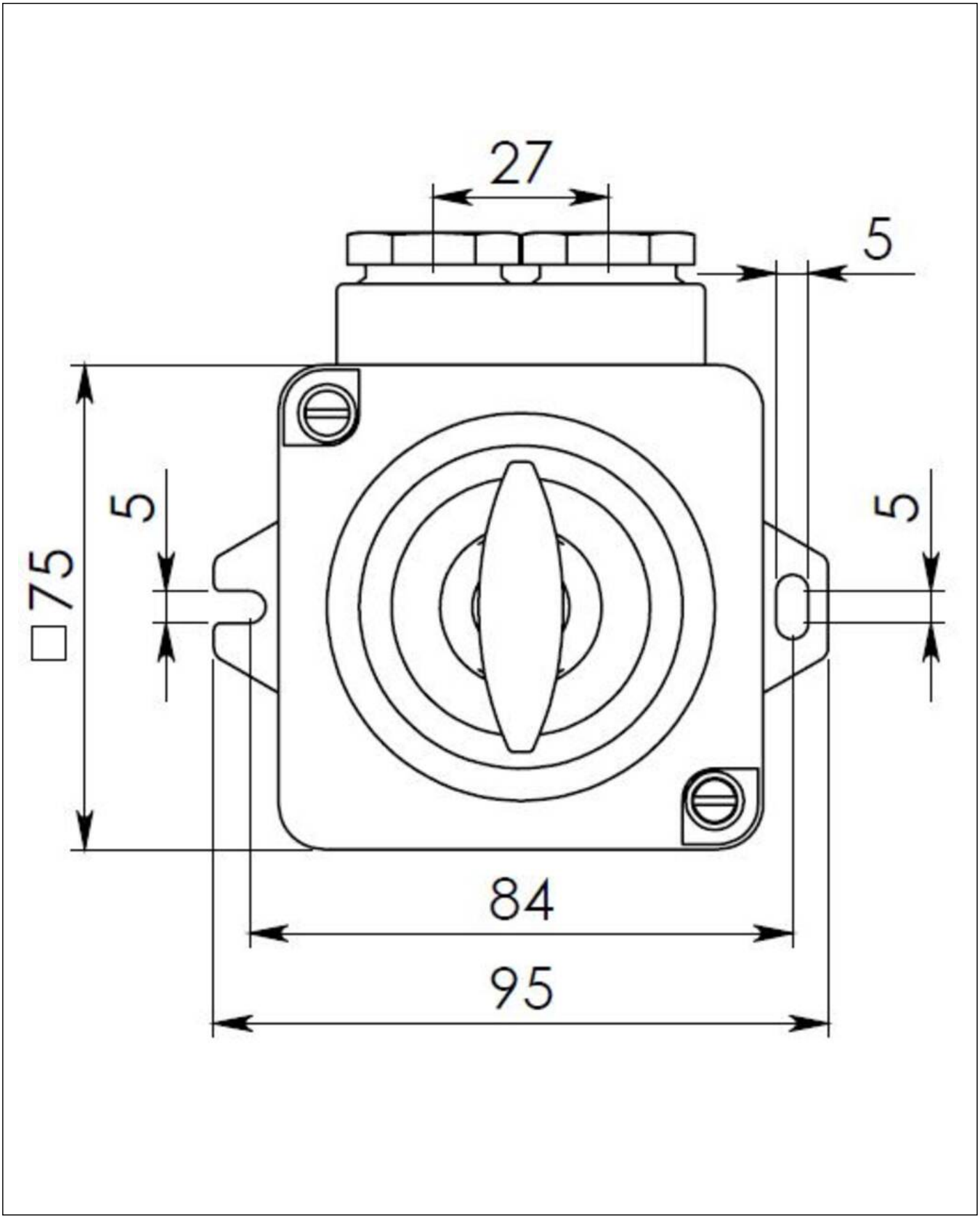

Your Contact:
WISKA Hoppmann GmbH
Kisdorfer Weg 28 · 24568 Kaltenkirchen · Germany
☎ +49-4191-508-0 · 🖷 +49-4191-508-209
contact@wiska.de · www.wiska.com

Other technical data on request / subject to change without notice

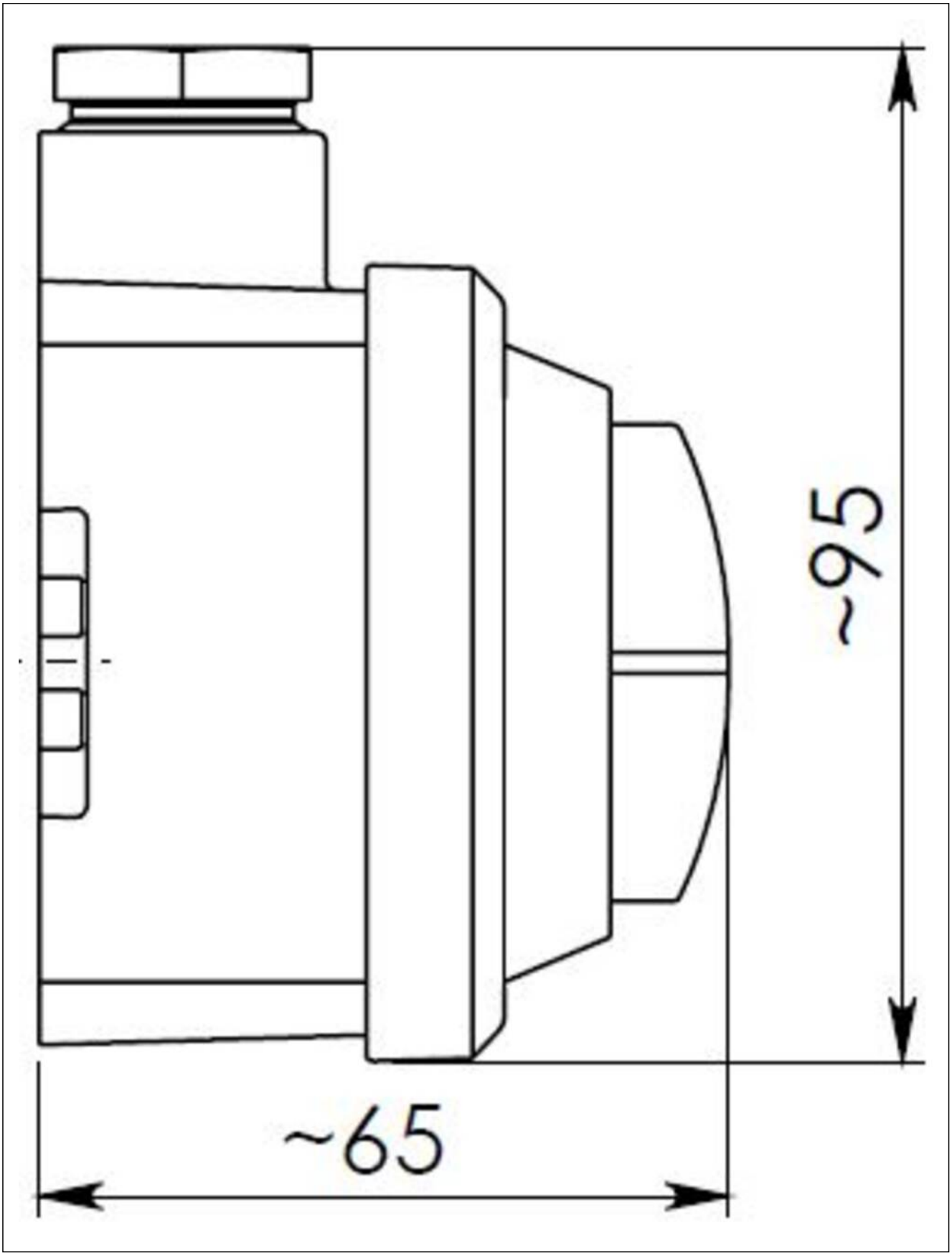

Your Contact:
WISKA Hoppmann GmbH
Kisdorfer Weg 28 · 24568 Kaltenkirchen · Germany
☎ +49-4191-508-0 · 🖷 +49-4191-508-209
contact@wiska.de · www.wiska.com

Other technical data on request / subject to change without notice